Advanced Optical Communication (AOC) Testbed @ IIT Patna

Present Status & Future Plan

Dr. Sumanta Gupta
Department of Electrical Engineering
Indian Institute of Technology Patna

AOC Testbed

Present Status

Verticals of AOC Research @ IIT Patna

Optical Fiber Communication (OFC)

- Short range
- Access and data center
- SMF and MMF
- Multiplexing techniques
- Working Testbed

Free Space Optical Communication (FSOC)

- For access network
- Various multiplexing
- ML based detection
- Working testbed

Underwater Visible Light Communication (UWVLC)

- LED & LD based
- Few meters to 10s of meters range
- Use of multiplexing
- Working transceiver and testbed

- OFC and FSOC testbed
  - Funded by SERB, IMPRINT-II
- Underwater Visible Light Communication testbed
  - Funded by NRB, DRDO

OFC Using SMF

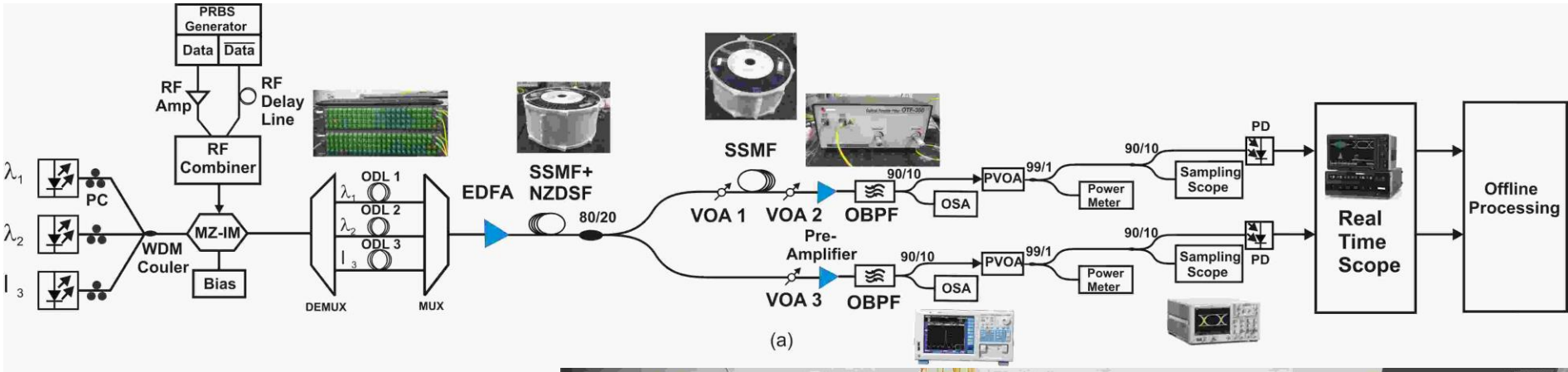

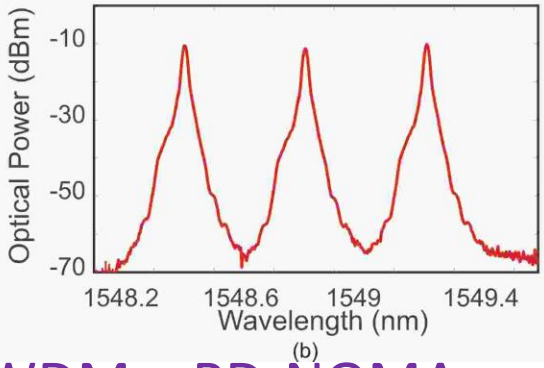

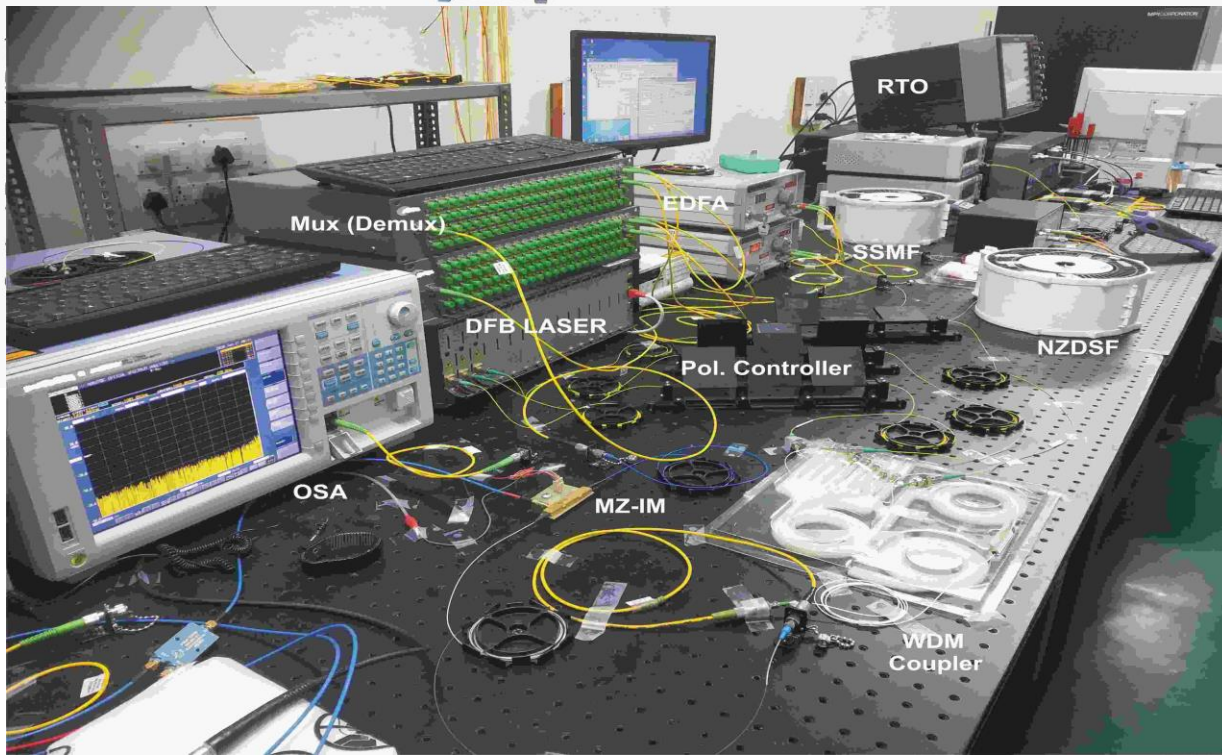

- WDM + PD-NOMA
- 50km reach @ 10G
- ML assisted detection

OFC using MMF

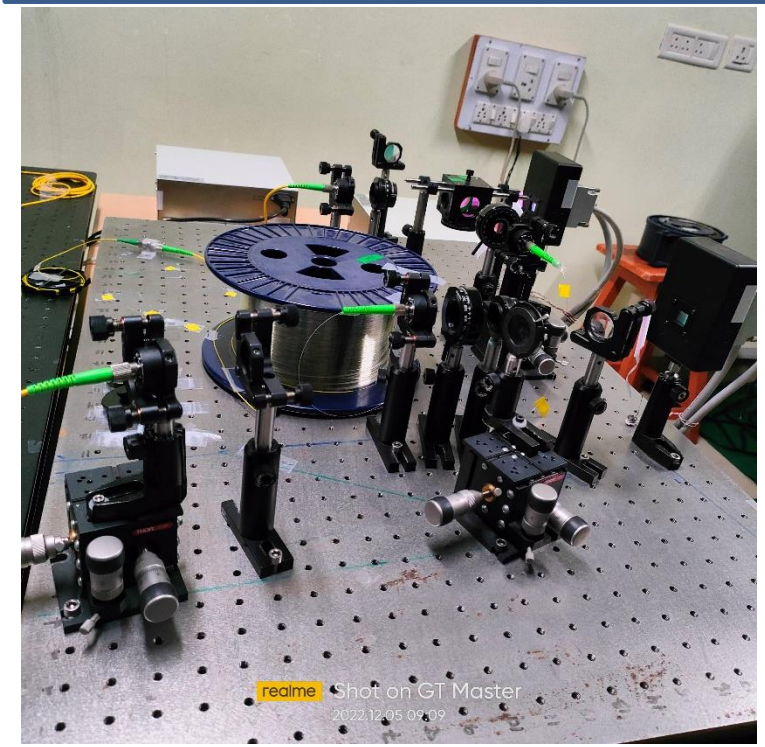

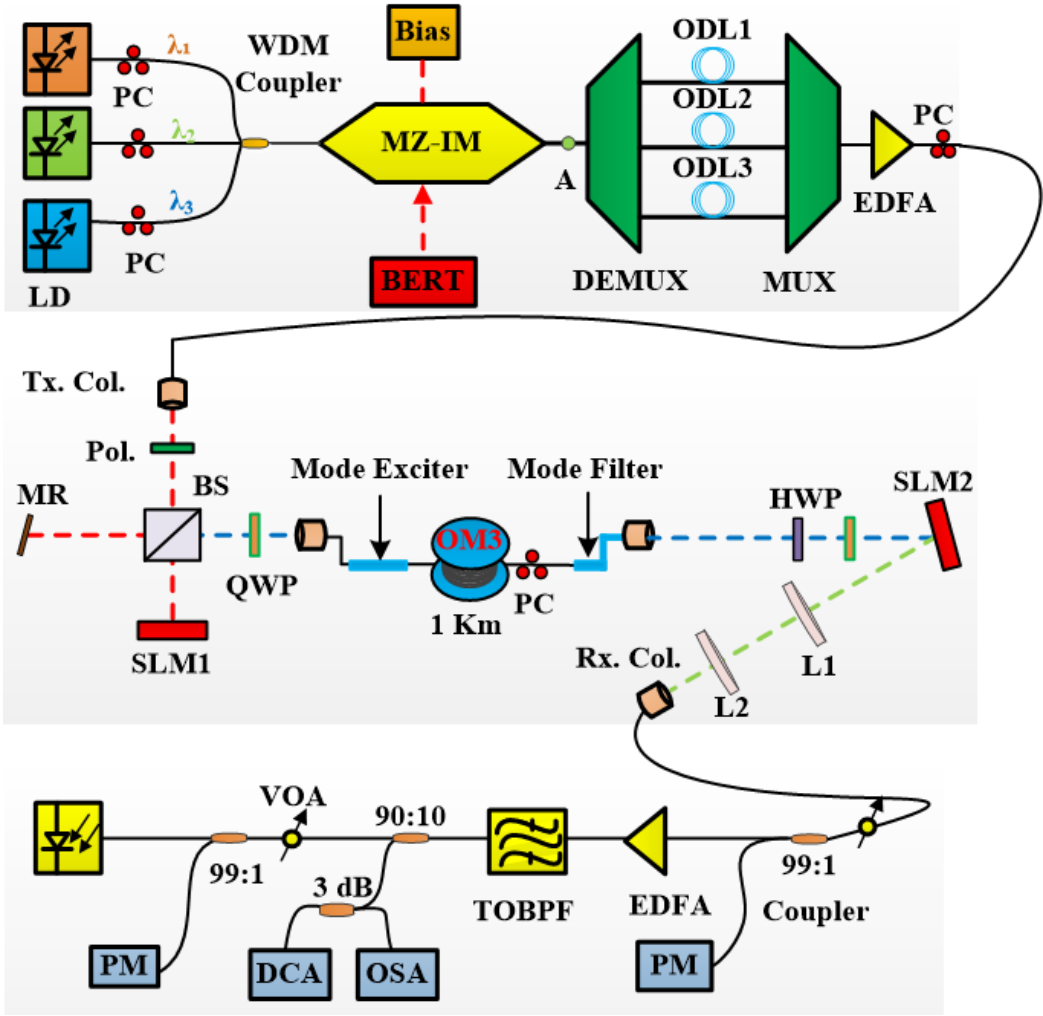

- WDM + OAM Mode Mux
- Conventional MMF of 1km
- Successful detection @10G/channel

FSOC Over Turbulent Channel

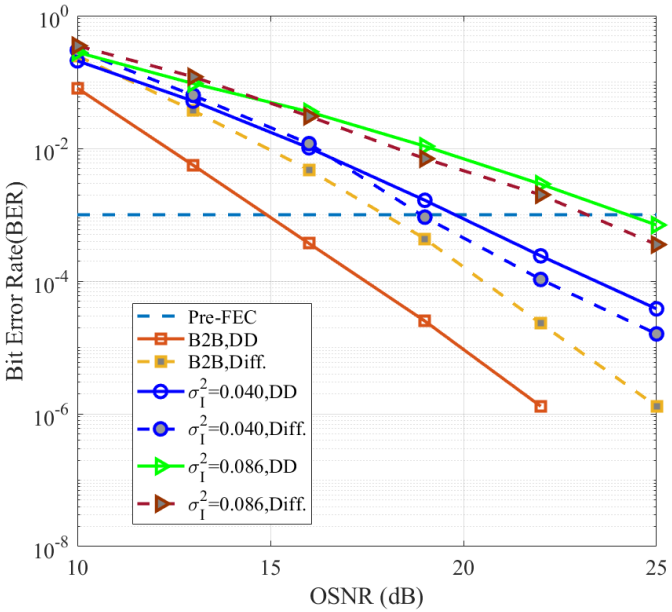

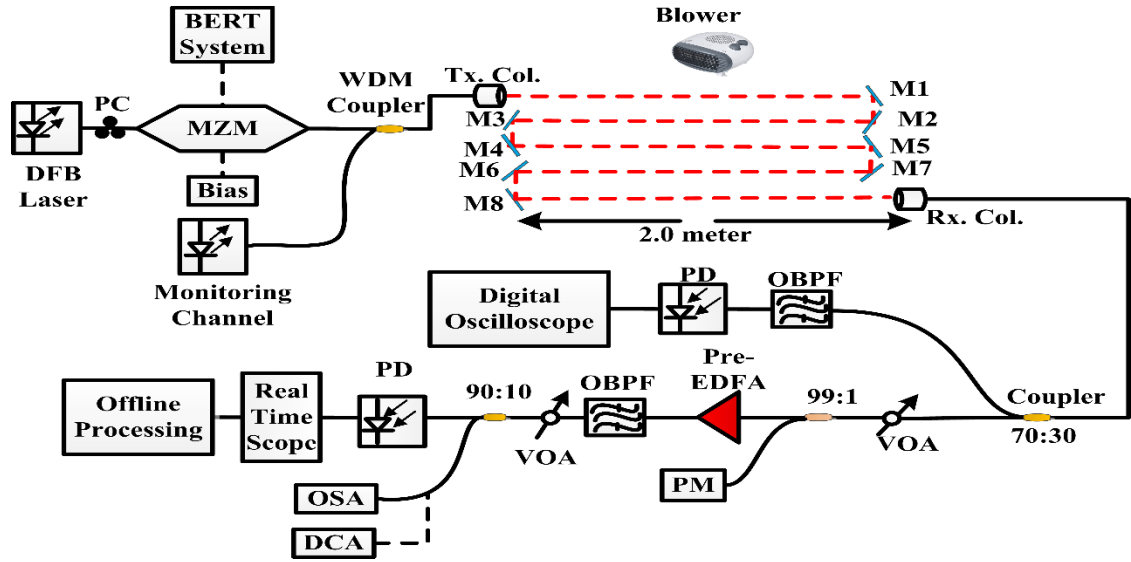

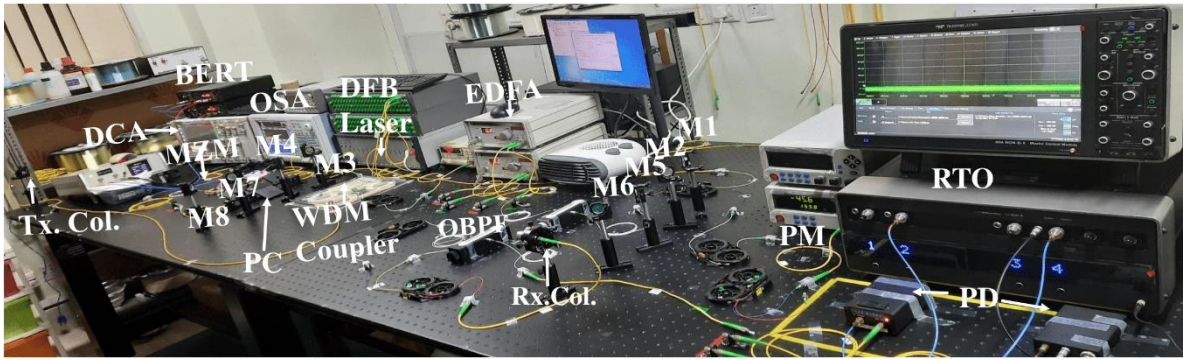

- 10G Data transfer
- Differential OOK
- Successful detection under turbulence
- Real time channel monitoring

FSOC Using WDM + PD-NOMA

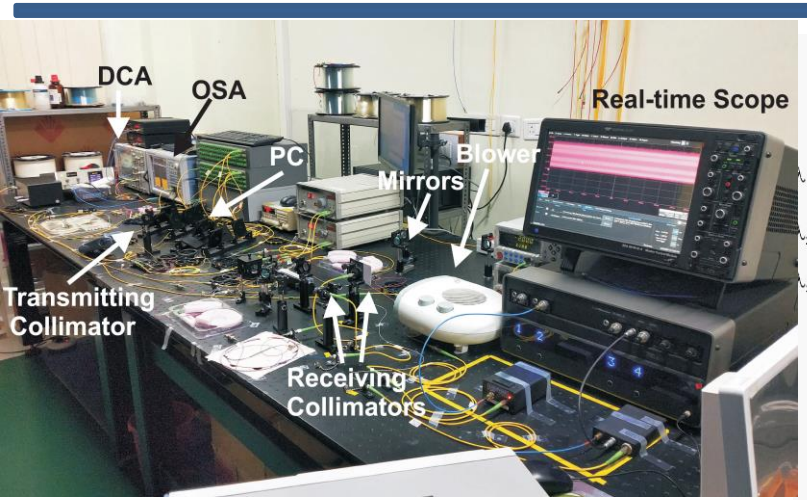

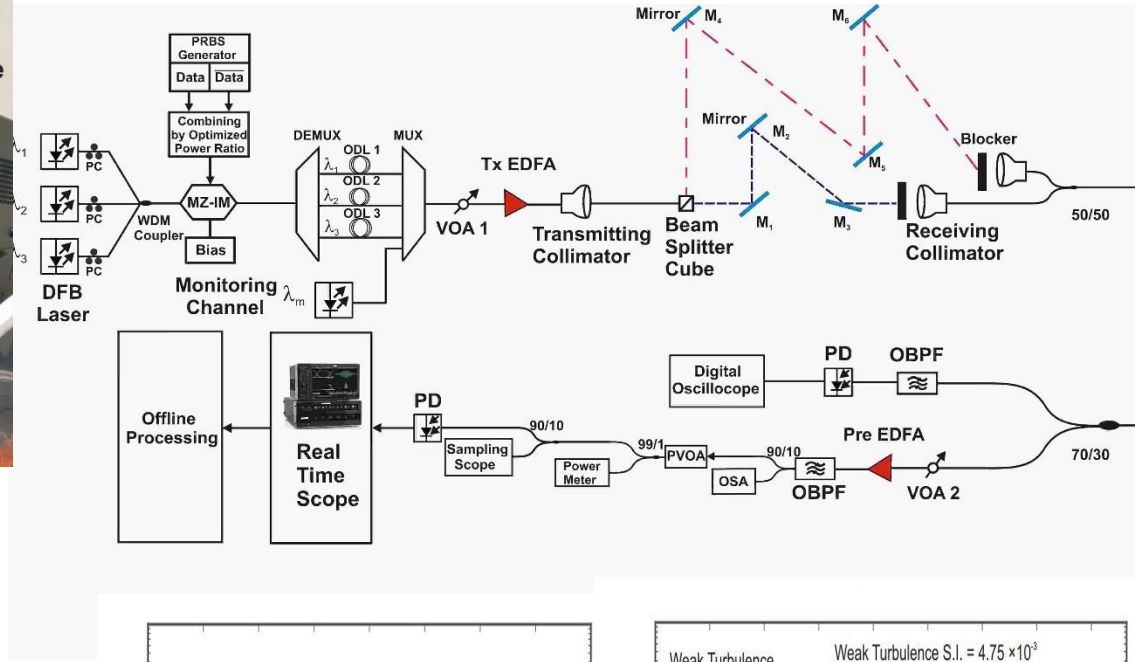

- 2-User PD-NOMA
- 50GHz spaced WDM
- 10G Data/channel
- Successful detection for
  - Near User
  - Far User

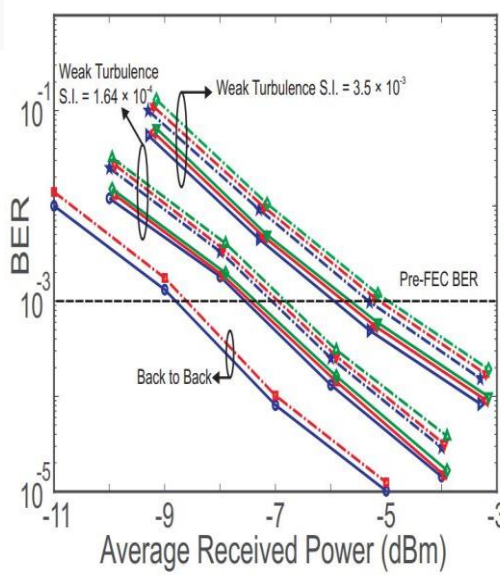

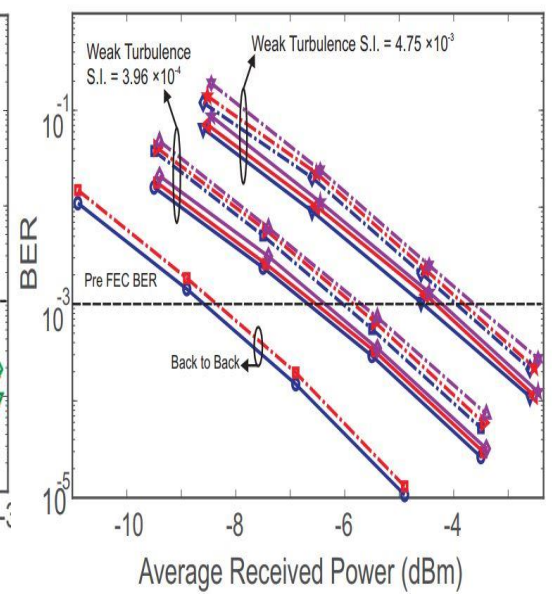

FSOC Using OAM + WDM + PD-NOMA

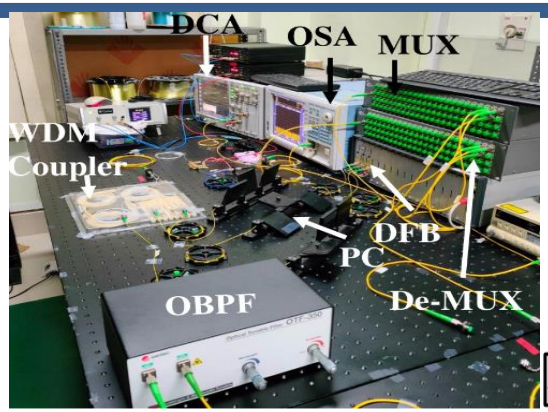

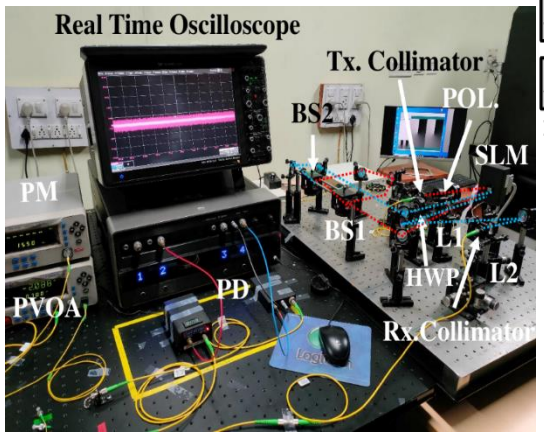

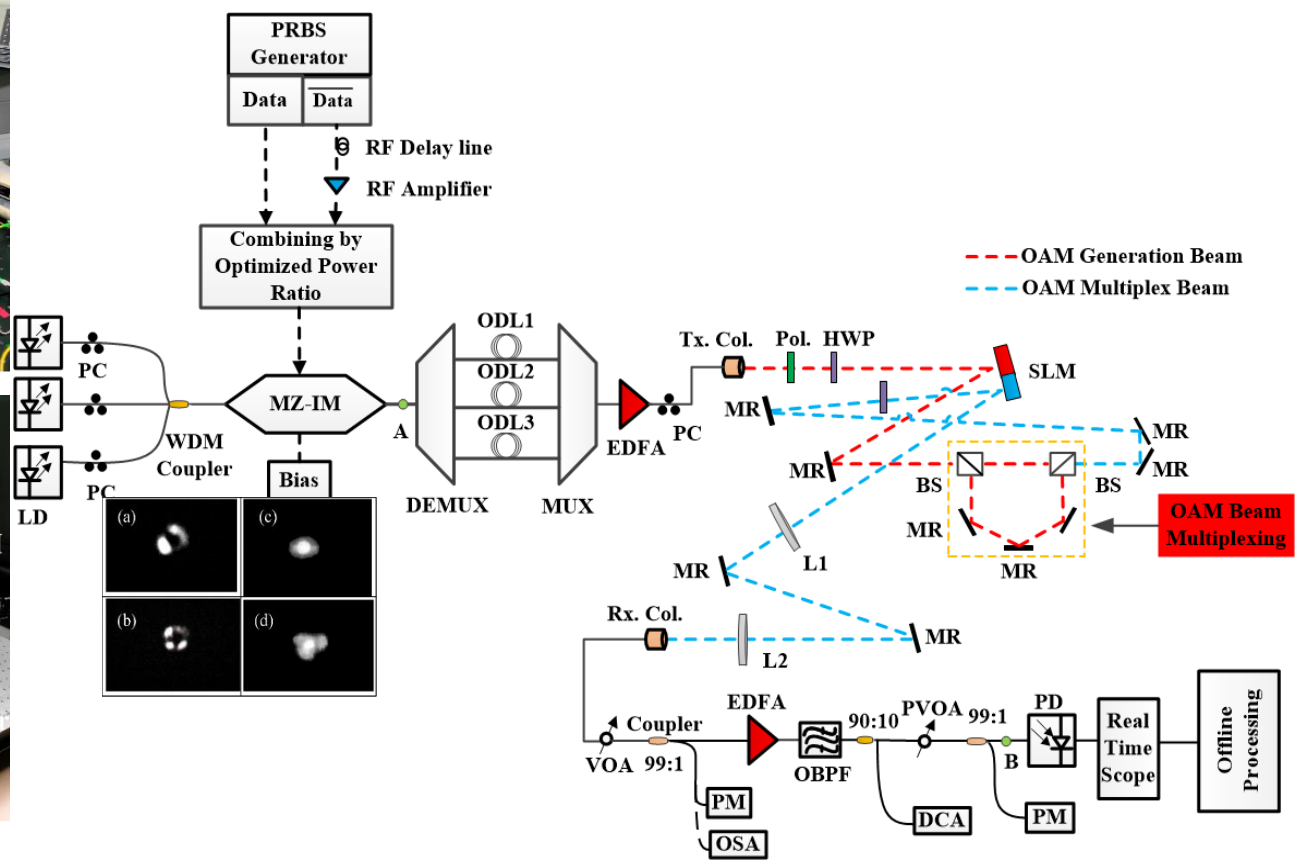

- Implementation of WDM + PD-NOMA + OAM mode multiplexing
- Overall 120Gbps capacity
- Data extraction at Near and Far User

UWVLC Using LED and Laser

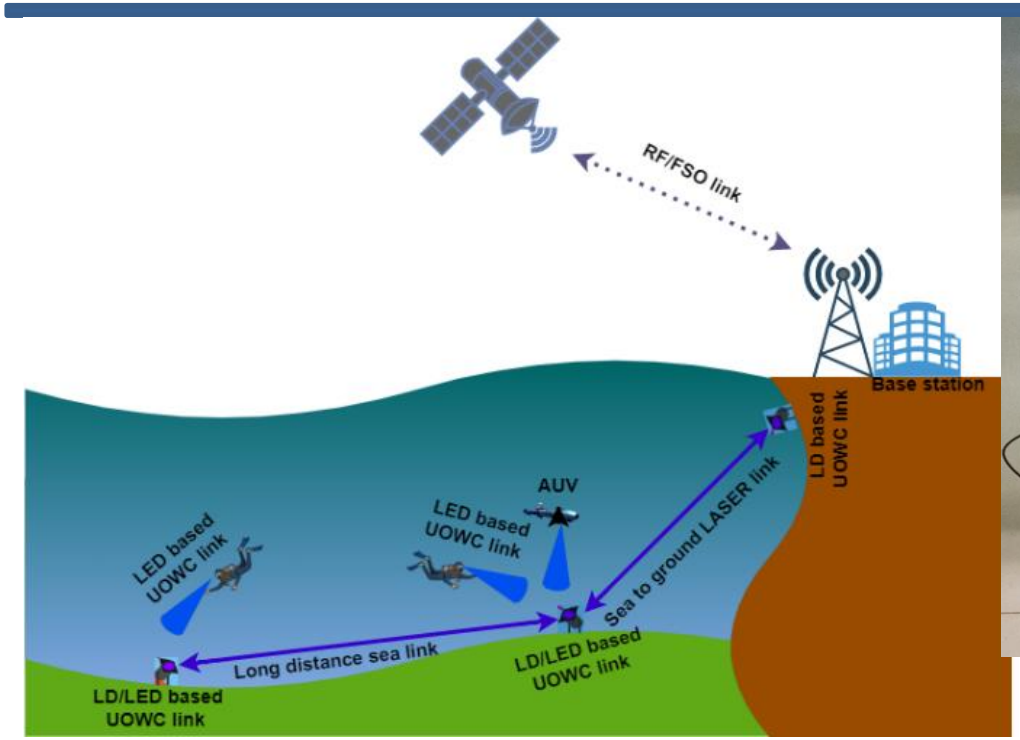

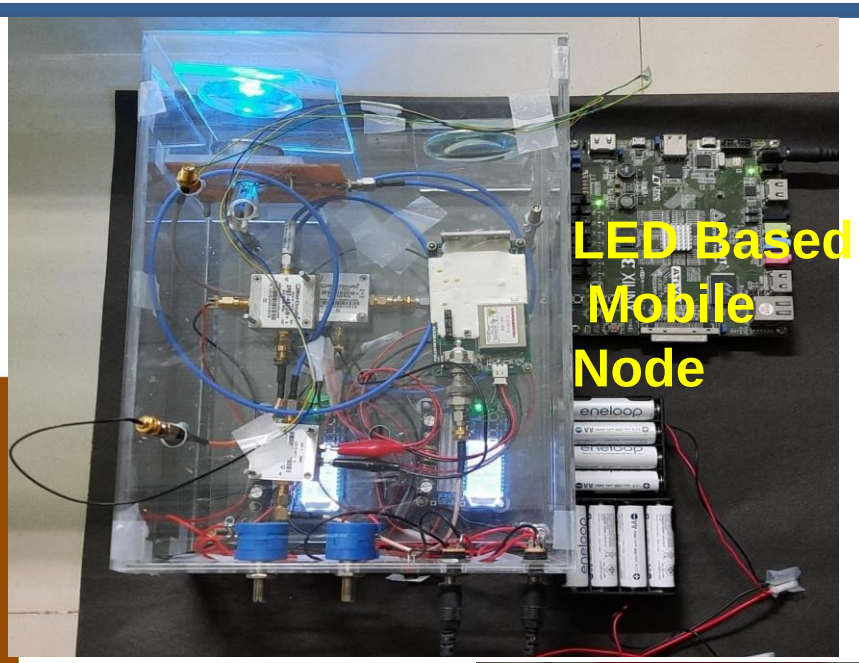

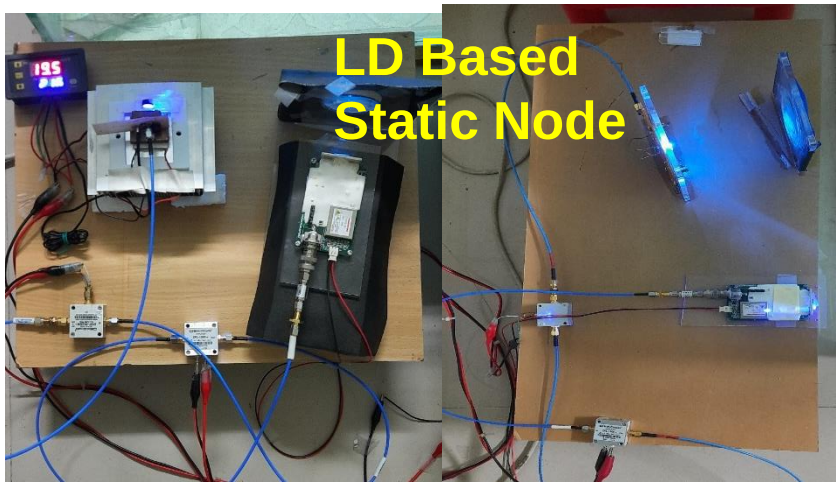

- 10s of Mbps connection
- Range
  - LED: Few meters
  - LD: Few tens of meter
- Real time transfer
  - Data, Audio, Video

UWVLC Testbed

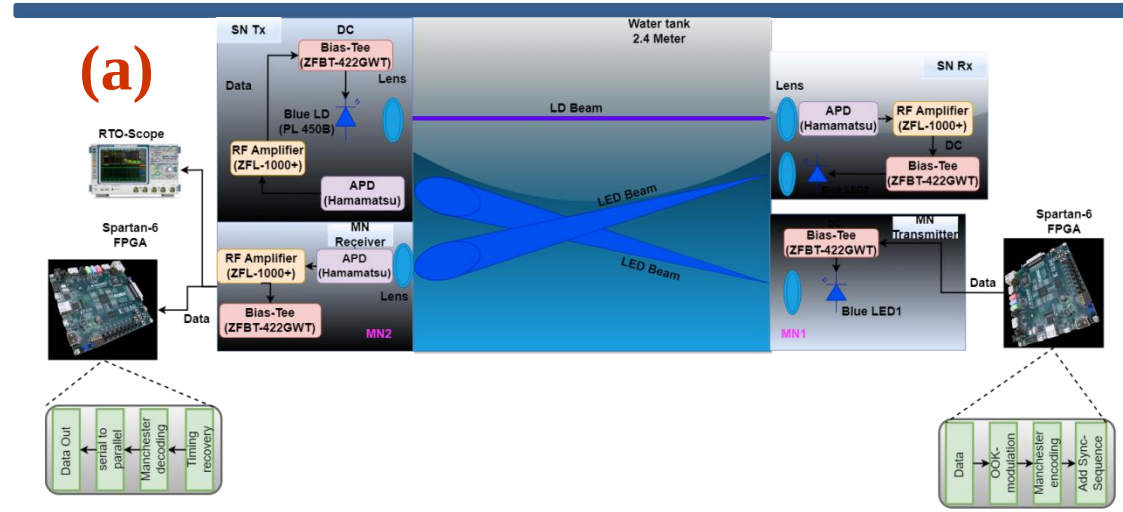

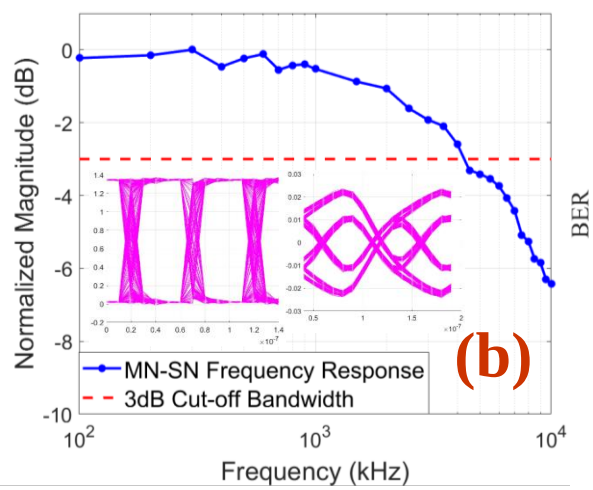

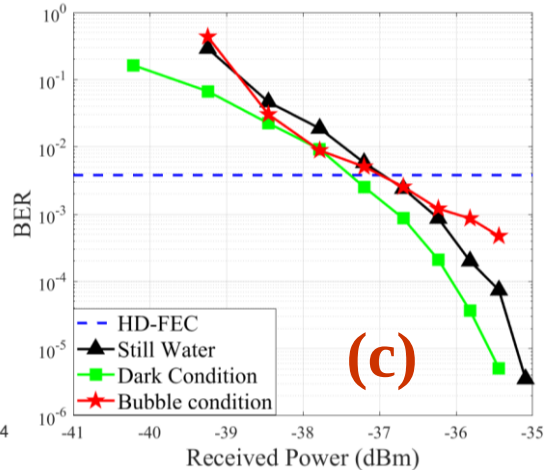

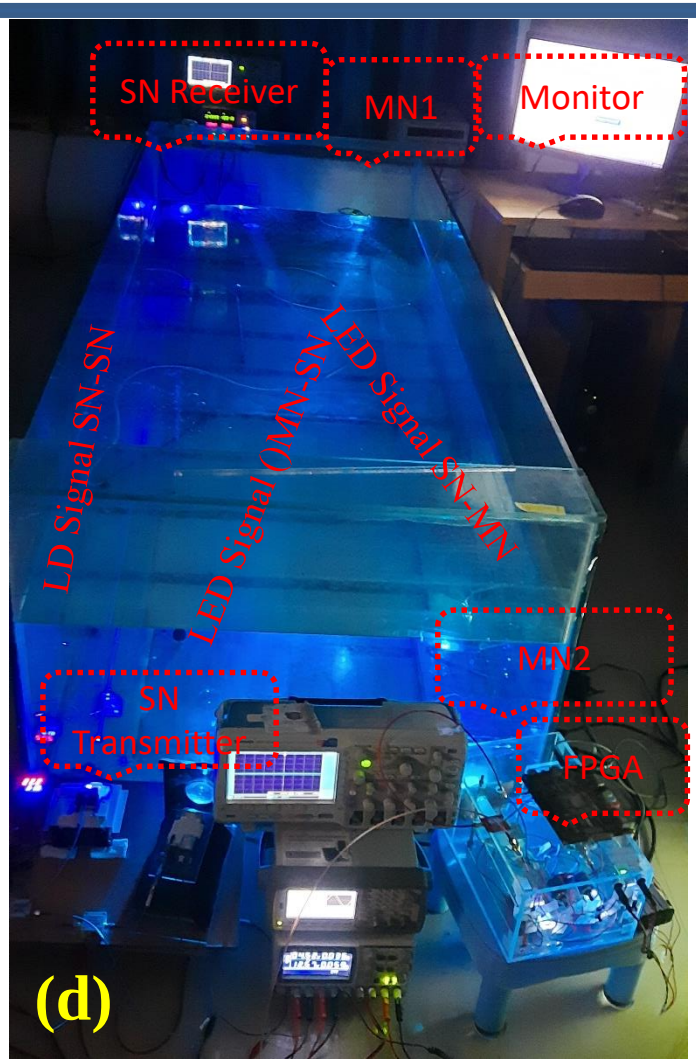

Real-time MN and SN based UWVLC system (b) Frequency response of MN-SN (c) BER performance of system (d) Actual LAB setup of MN-SN communication

Distributed Sensing Testbed

Funded by: NRB- DRDO

DAS Using SMF

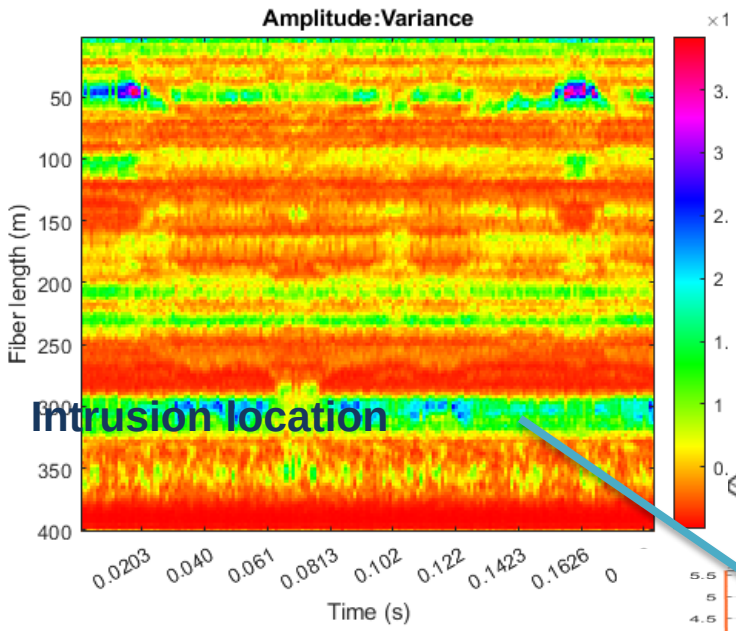

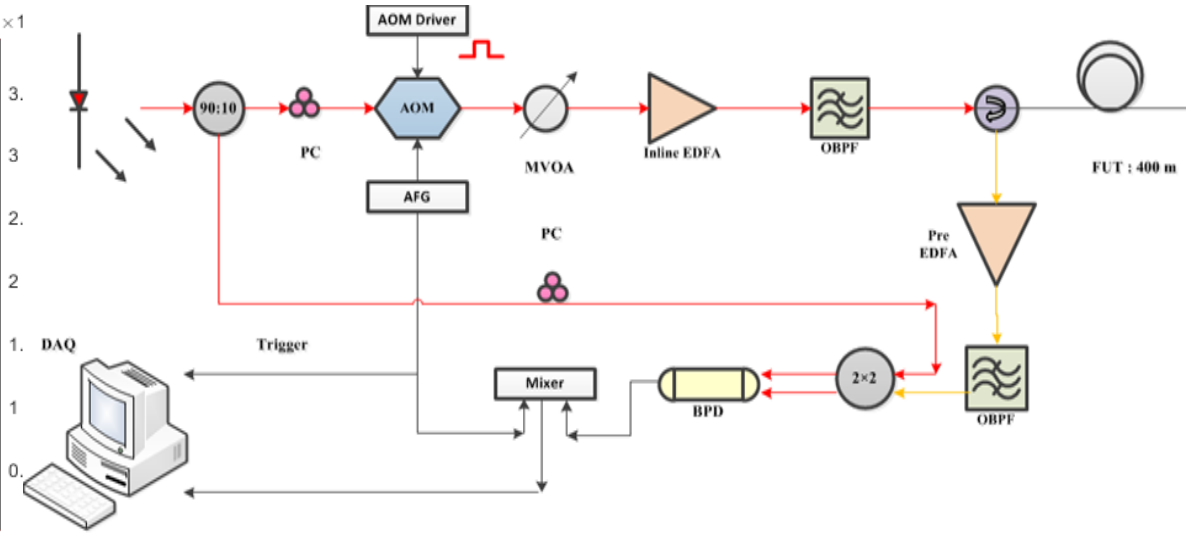

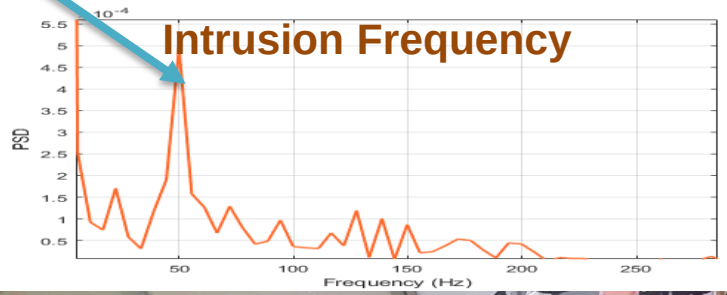

- Φ-OTDR system
- Detect intrusion
- Classify intrusion
- Use ML & DL methods

AOC Testbed
&
Technology Development

Proposed Contribution from IITP

AOC Testbed Creation & Technology Development

- AOC Testbed
  - SMF, MMF, and MCF based SDM link for Access & Data center
  - Hybrid Optical fiber + FSO/VLC transceiver
  - AI powered optical receiver

- Technology Development
  - Field deployable FSO transceiver
  - Visible light transceiver prototype for AV & AUV
  - MUX/DEMUX for SDM

Industry Collaboration

Existing and Proposed

Partnership with Industry

- Existing
  - **Sterlite Technologies Limited**
    - ✓ Development of high capacity spectrally efficient link using OAM mode multiplexing using conventional MMF
      - MoU dated 26/12/2019
    - ✓ SDM in optical fiber
      - NDA dated 03/03/2015
- Proposed Development Activities
  - **SFO Technologies Pvt. Ltd.**
    - ✓ Prototype of multi-degree field deployable smart FSO node
    - ✓ 1-10Gbps per span capacity
    - ✓ Seamless wire-wireless connectivity
  - **Sterlite Technologies Limited**
    - ✓ MCF based access/data center link with data rate > 100Gbps
    - ✓ MCF based DAS for underwater environment
    - ✓ OAM Mode MUX/DEMX using MCF

Thank You